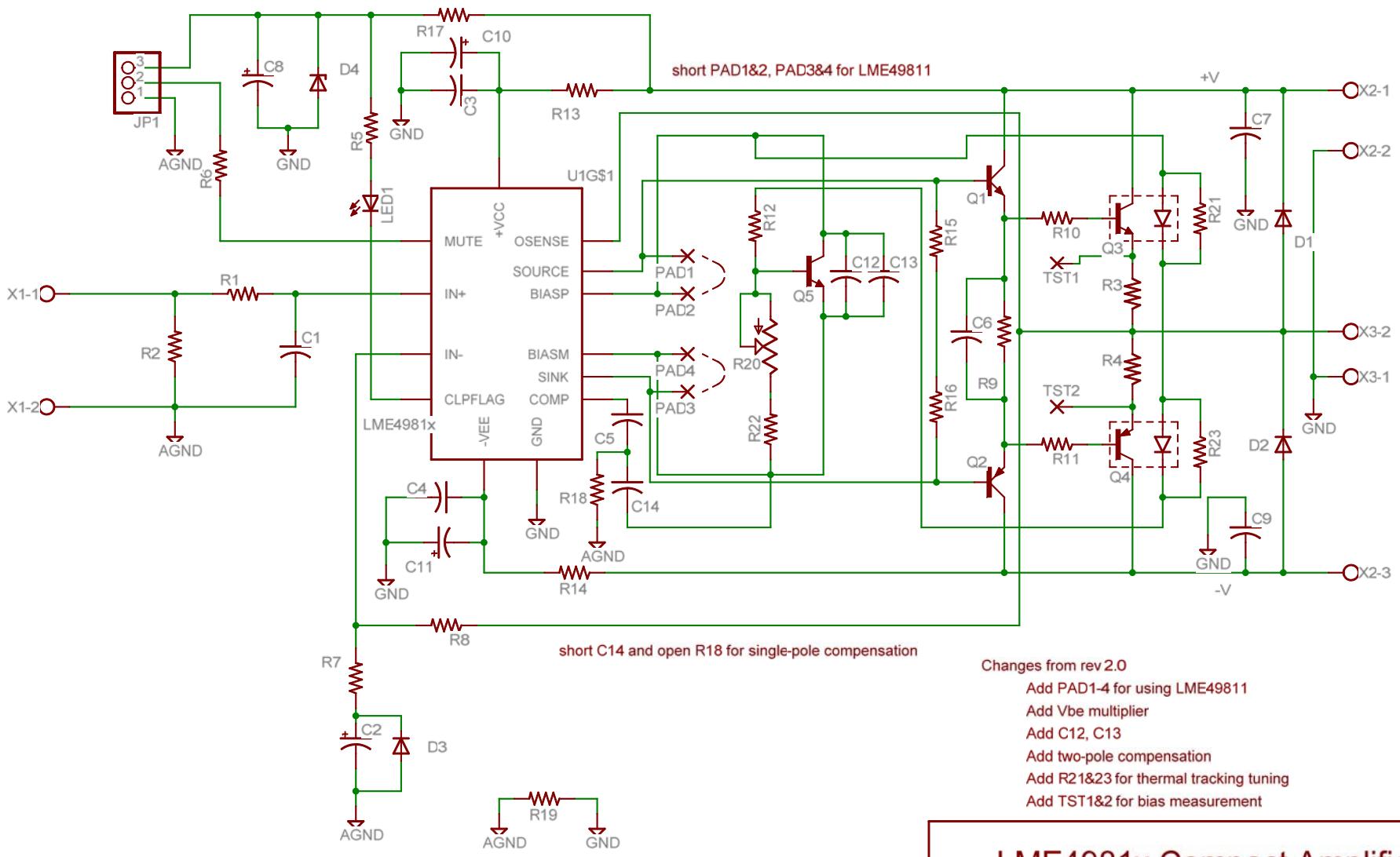

Changes from rev 2.0

- Add PAD1-4 for using LME49811
- Add Vbe multiplier
- Add C12, C13
- Add two-pole compensation
- Add R21&23 for thermal tracking tuning
- Add TST1&2 for bias measurement

LME4981x Compact Amplifier

TITLE: lme49810_compact_amp	
Document Number:	REV: 2.1
Date: 2010-02-23 11:27:09	Sheet: 1/1